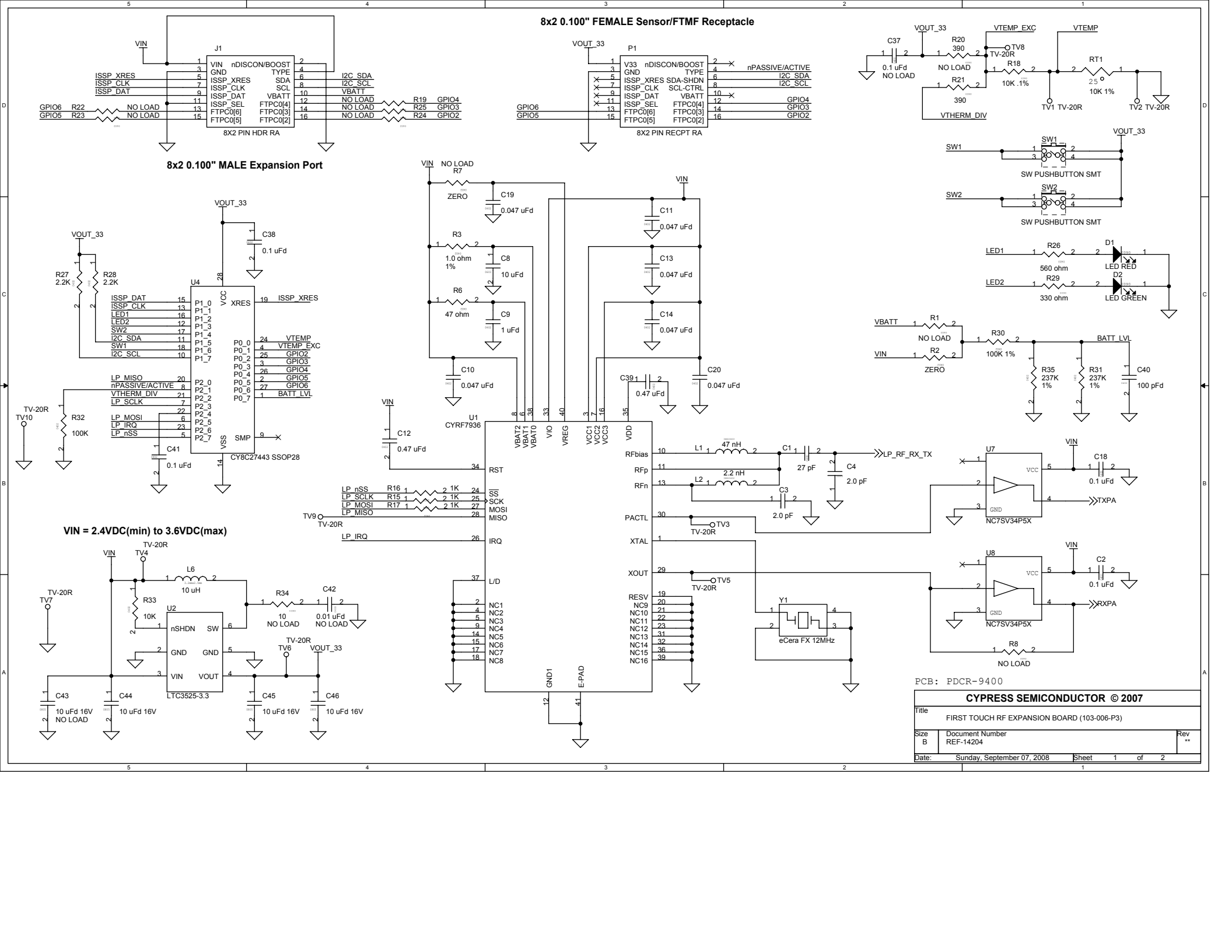
8x2 0.100" FEMALE Sensor/FTMF Receptacle
8x2 0.100" MALE Expansion Port
VIN = 2.4VDC(min) to 3.6VDC(max)
J1
8X2 PIN HDR RA
P1
8X2 PIN RECPT RA
U1
CYRF7936
U2
LTC3525-3.3
U4
CY8C27443 SSOP28
U7
NC7SV34P5X
U8
NC7SV34P5X
Y1
eCera FX 12MHz
SW PUSHBUTTON SMT
SW PUSHBUTTON SMT
LED RED
LED GREEN
NO LOAD
ZERO
TV-20R
LP_RF_RX_TX
TXPA
RXPA
PCB: PDCR-9400
CYPRESS SEMICONDUCTOR © 2007
FIRST TOUCH RF EXPANSION BOARD (103-006-P3)
REF-14204
Sunday, September 07, 2008

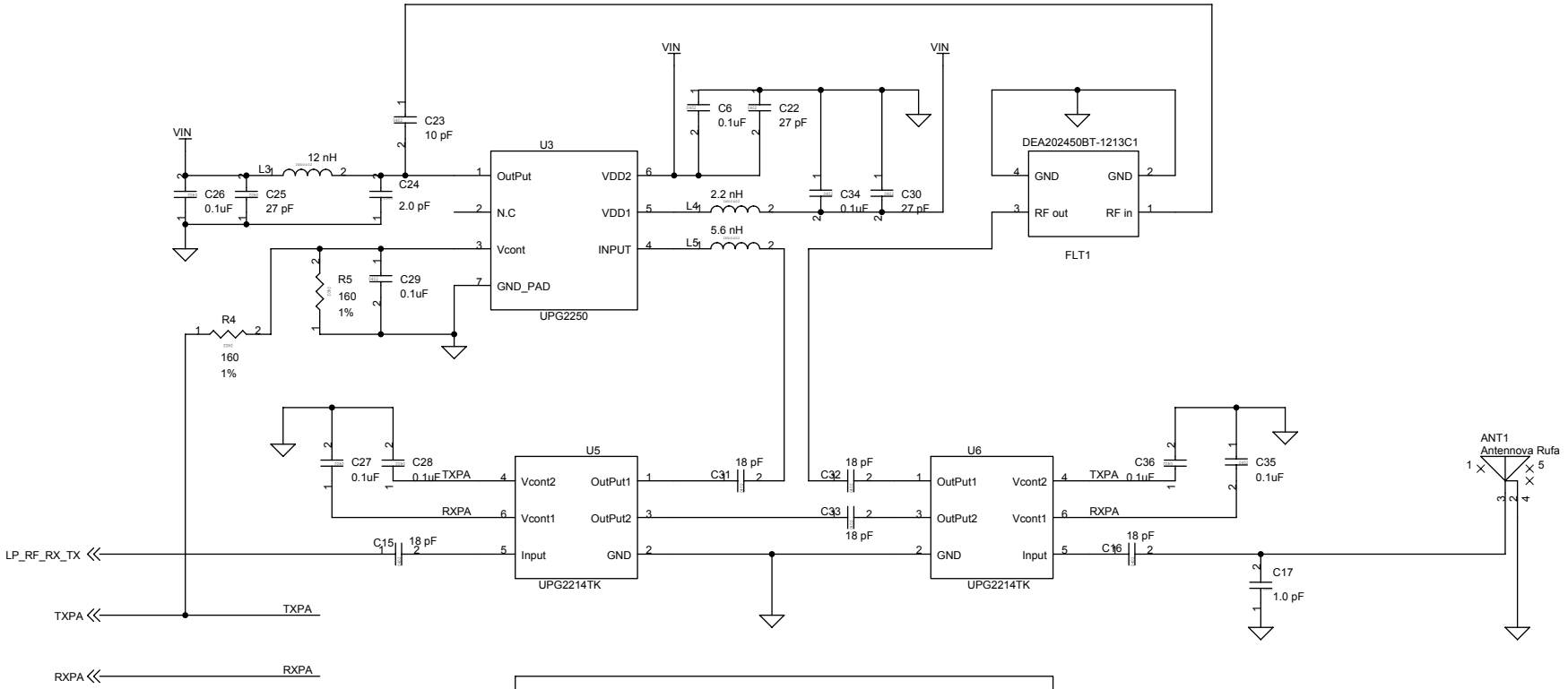

RXPA (LP XOUT)	TXPA (LP PACTL)	Input to OutPut1	Input to OutPut2	Mode of operation for transmit and receive
0	1	ON	OFF	Transmit with PA on and at fixed gain. Tx level of LP Radio varies total Tx power.
1	0	OFF	ON	Transmit with PA off, or receive.

PCB: PDCR-9400

CYPRESS SEMICONDUCTOR © 2007

Title	FIRST TOUCH RF EXPANSION BOARD (103-006-P3)	
Size B	Document Number REF-14204	Rev **
Date: Sunday, September 07, 2008	Sheet 2 of 2	